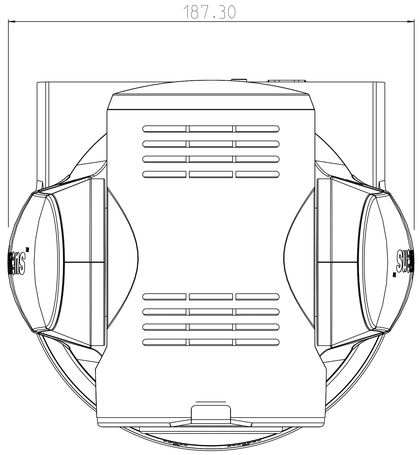
187.30

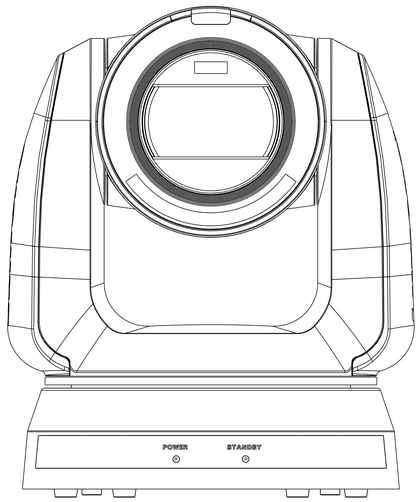
POWER
STANDBY

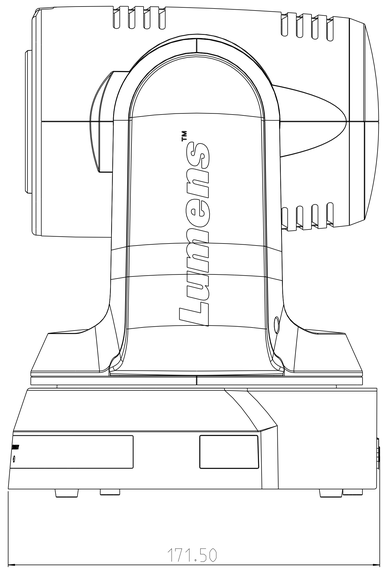
Lumens
171.50

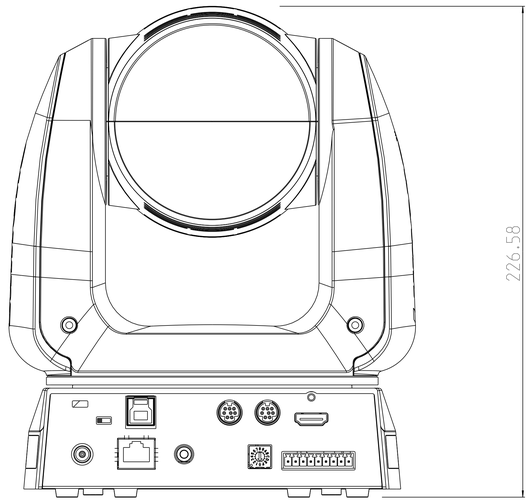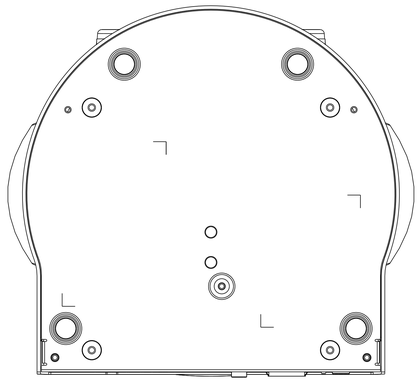
226.58